California Polytechnic State University Pomona
DEPARTMENT OF ELECTRICAL & COMPUTER ENGINEERING

Intro to Microelectronics Laboratory

ECE 2200L
Report #3

LAB 3 – Applications of PN Diode

Prepared by
Elias Cortes & Kevyn Santos

Presented to
Aspet Gharakhanian

February 13, 2025

Introduction:

Our objective during this lab is to experiment and analyze different applications of PN diodes as nonlinear circuit elements. Some of the applications we will be analyzing include rectifiers, peak detectors as DC power supplies, and clippers/limiters.

Parts List:

1. Resistors: 5 [kΩ], 10 [kΩ]
2. Capacitors: 1 [μF], 100 [μF]
3. Diodes: 1N4001 PN

Circuit Schematics:

Part 1:

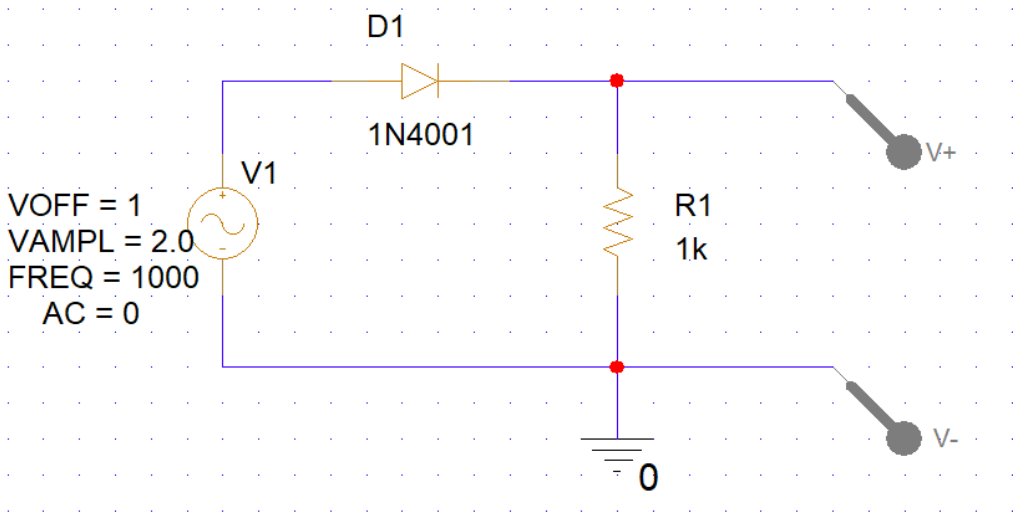

Part 2 & Part 3:

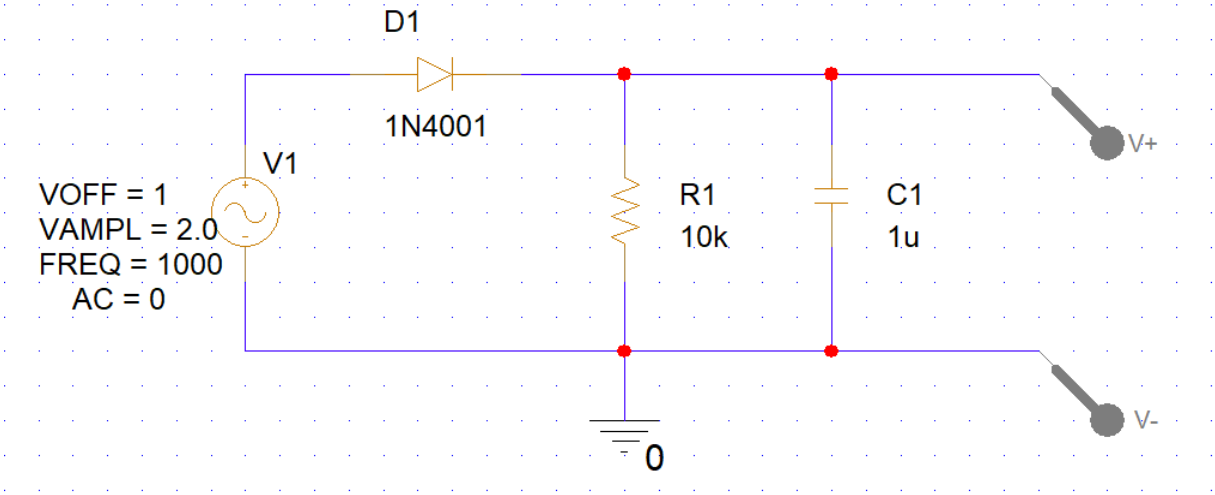

It is important to note for part 2, we will leave the circuit as is and vary input voltage. For part 3, we will change the capacitance, resistance, and frequency while the input voltage stays at 5 volts peak.

Part 4:

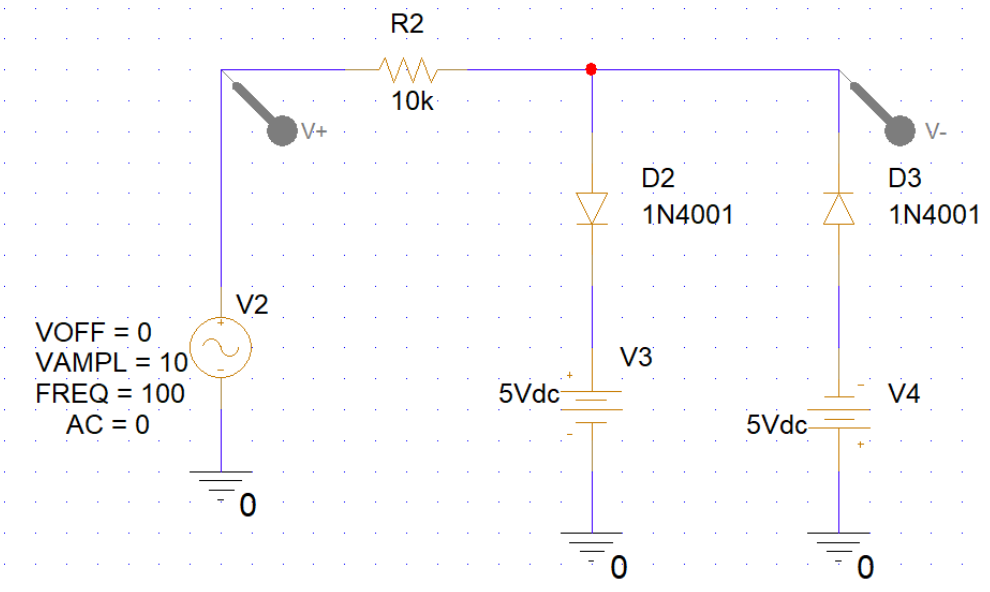

Pre-Lab:

Vi (Vpk)	1	2	3	4	5	6	7	8	9	10
Vo (Vpk)	1	2	3	4	5	5.4	5.45	5.45	5.5	5.5

TABLE 1. Depicts data gathered from simulation.

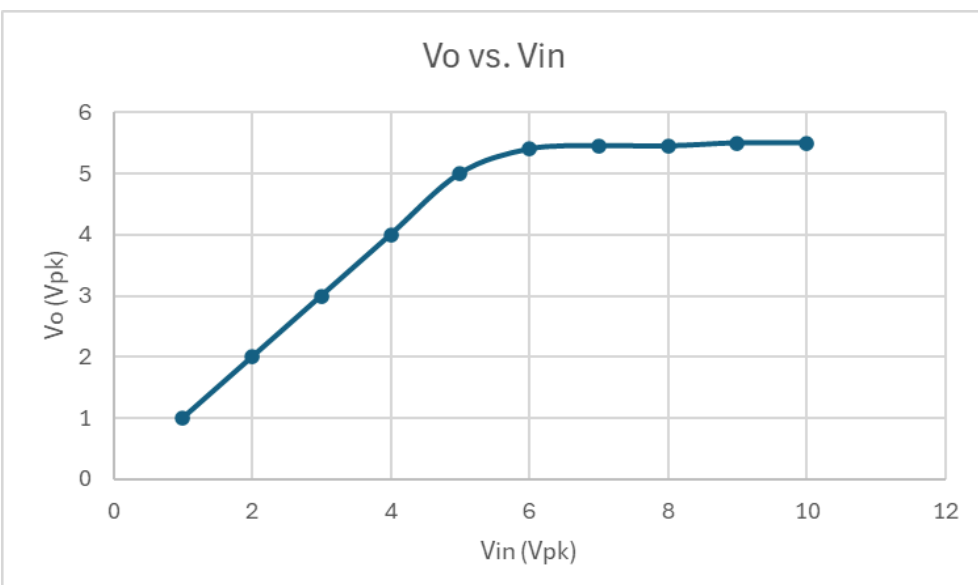

Fig. 1. Depicts Vo vs. Vi based on simulation data.

Experimental Data:
Part 1:

Vi (Vpk)	0.5	0.75	1	1.5	2.5	3.5	4.5	5
Vo (Vpk)	0.123	0.32	0.563	1.031	1.998	2.938	4.0	4.5

TABLE 2. Displays data gathered during part 1.

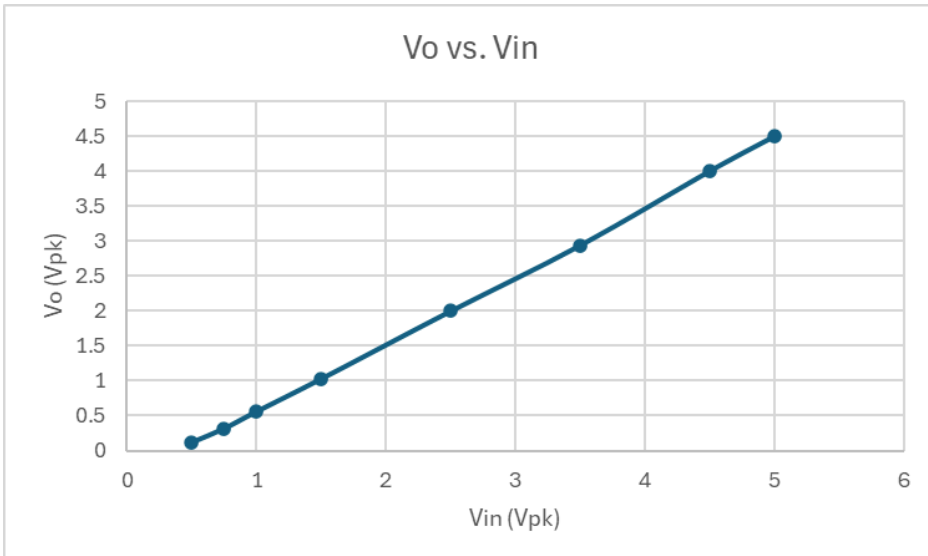

Fig. 2. Displays Vo vs. Vin based on data from part 1.

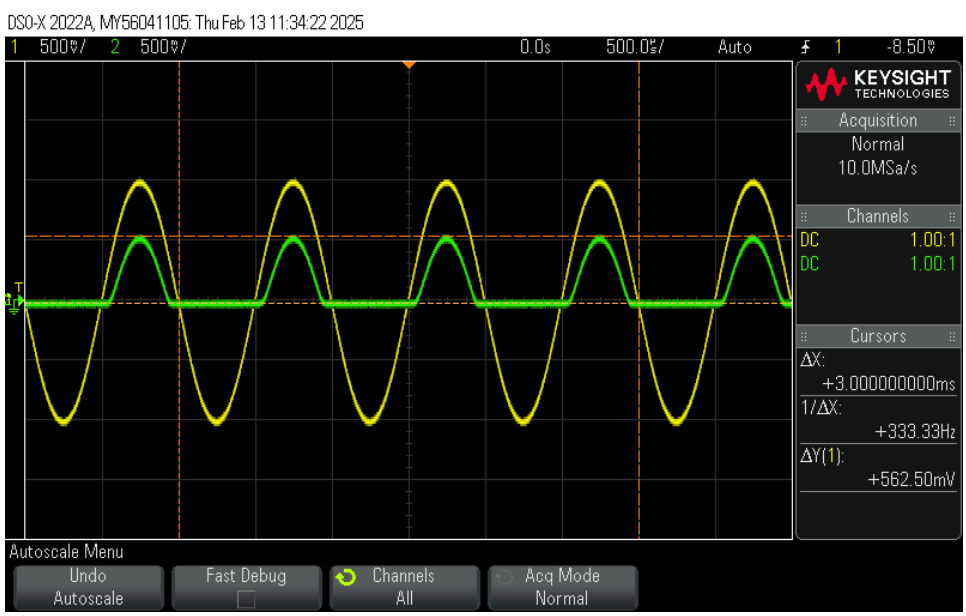

Fig. 3. Scope capture of Vo vs. Vin, where Vin = 1 [V].

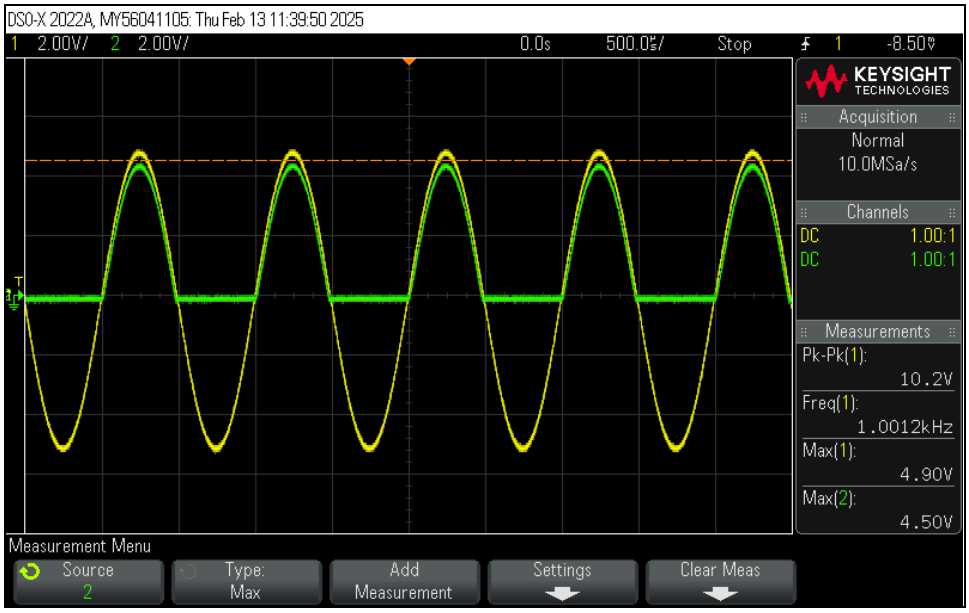

Fig. 4. Scope capture of Vo vs. Vin, where Vin = 4.5 [V].

Part 2:

Vi (Vpk)	1	1.5	2	3	5	7	9	10
Vo (Vdc)	0.42	0.86	1.3	2.2	4.02	5.84	7.64	8.54

TABLE 3. Displays data gathered during part 2.

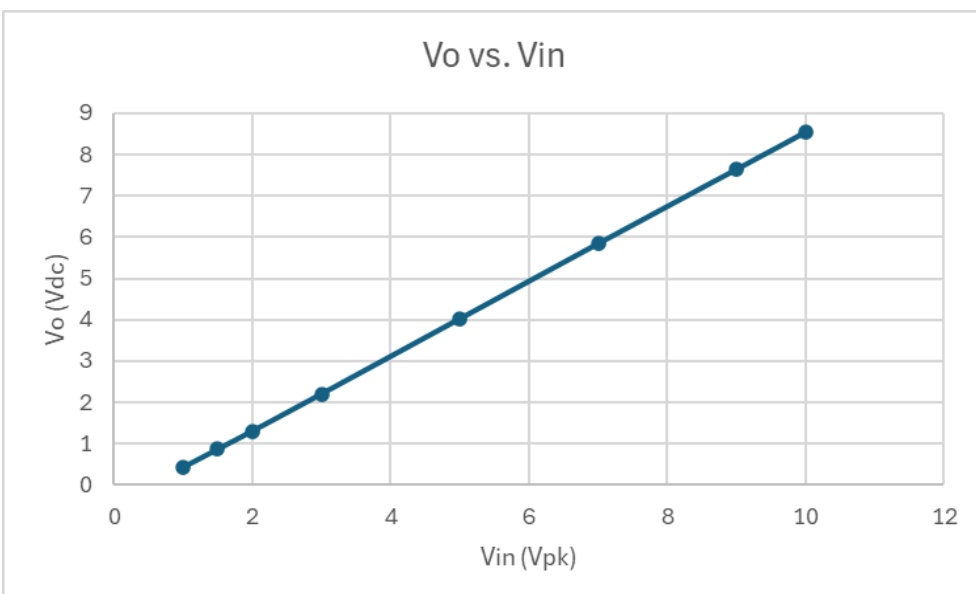

Fig. 5. Displays Vo vs. Vin based on data from part 2.

Part 3:

f (Hz)	80	160	300	500	700	850	1000	
Vo1 (Vpp)	2.47	1.59	0.96	0.61	0.46	0.374	0.326	C=1μF R=10k
Vo2 (Vpp)	0.032	0.018	0.01	0.008	0.006	0.006	0.004	C=100μF R=10k
Vo3 (Vpp)	3.46	2.53	1.73	1.13	0.98	0.76	0.68	C=1μF R=5k
Vo4 (Vpp)	0.058	0.3	0.018	0.01	0.008	0.008	0.006	C=100μF R=5k

TABLE 4. Displays data gathered during part 3.

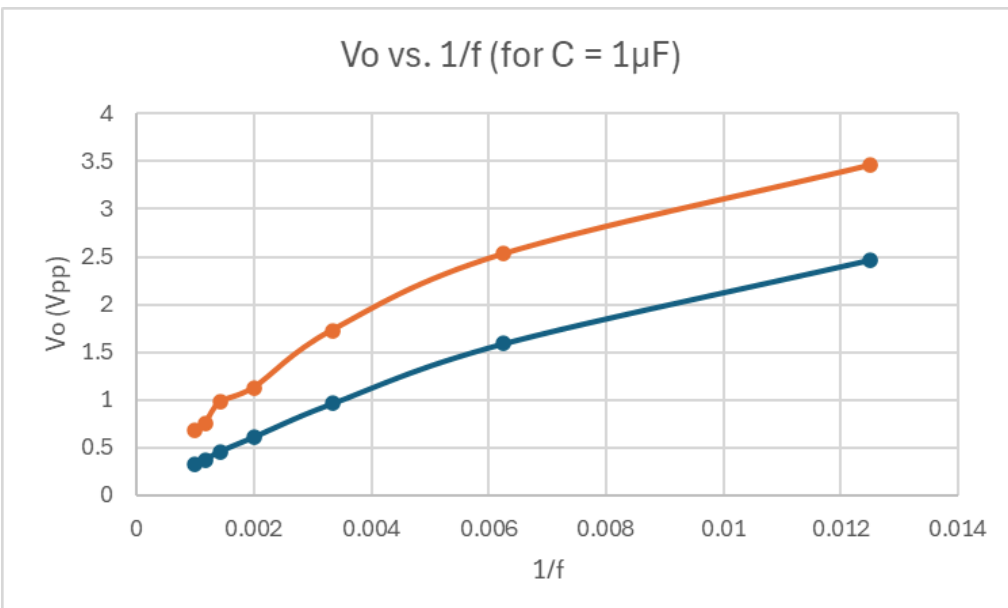

Fig. 6. Displays Vo vs. (1/f) based on data from part 2.
Orange = 5 [kΩ] and Blue = 10 [kΩ].

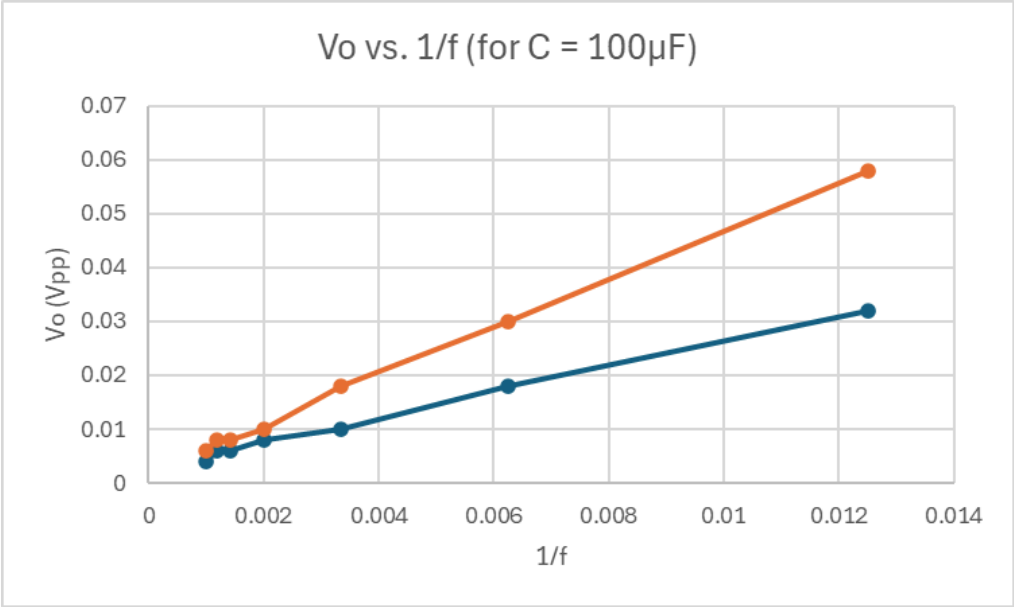

Fig. 7. Displays Vo vs. (1/f) based on data from part 3.
Orange = 5 [kΩ] and Blue = 10 [kΩ].

Part 4:

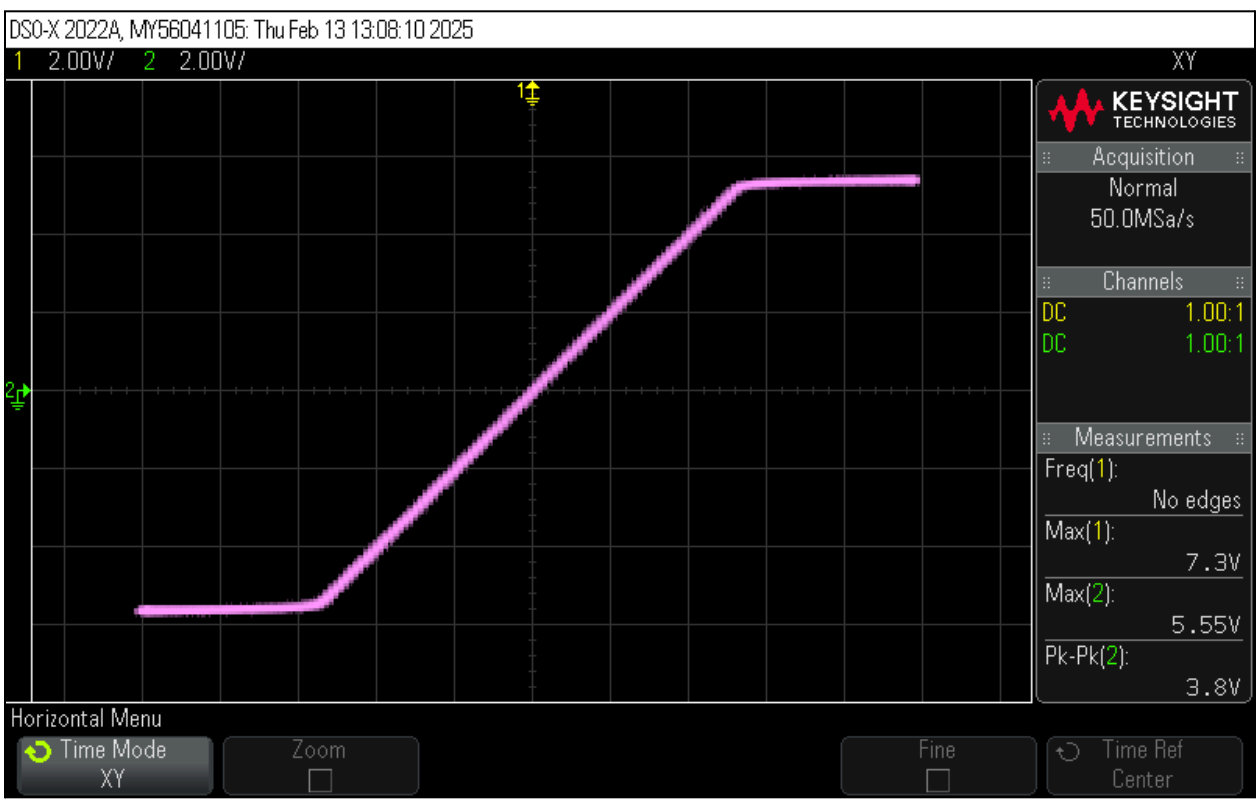

Fig. 7. Plot of Vo vs. Vin based on circuit from part 4.

Conclusion:

The main focus of this lab was to study a few applications of PN diodes. During part 1, we constructed a rectifier circuit and saw that the circuit only allowed positive voltages to be displayed. During part 2, we constructed a peak detector circuit and noticed that Vo was a DC conversion of Vin (Vo tracked Vin and wasn't sinusoidal). During part 3, we used the same circuit as in part 2, although we changed the resistance and capacitance and varied the frequency. We were interested in measuring the ripple voltage across the resistor and discovering how ripple voltage is inversely proportional to frequency (at greater frequencies mostly). Finally, during part 4 we constructed a limiter circuit and realized that Vo would not increase beyond 5.55 [V], even though Vin could be increased beyond 5.55 [V]. Figure 7 illustrates that behavior, and our lab results match our pre-lab results. Essentially, this lab gave us a hands on experience where we were able to verify the behavior of diode circuits based on a given application. Our results show that the circuits behaved as we theoretically expected them to. Some of the error in our results, such as the slight unevenness of our ripple voltage graphs, could be attributed the tolerance of our components and the precision of our instruments. During the lab we noticed that our ripple voltage waveform was a little fuzzy, which made it a little difficult to get a precise reading of the peak voltage.